CDS1830 potentiometric output – Measurement range 0 up to 30 000 mm

Specifications:

Measurement range	0 up to 30 000 mm
Output signal	1kΩ potentiometer (other values on demand)
Resolution	Quasi infinite (depends on the operating system)
Material	Body and cover - Aluminium (RohS) Measuring cable - Stainless steel
Cable diameter	0,90 mm
Detection element	Multi-turn Hybrid potentiometer
Connection	Male connector M16 - DIN 3 pin Male connector M12 - 4 pin PVC cable - 4 wires
Standard linearity	+/- 0,15% f.s. +/- 0,10% f.s. (optional)
Protection class	IP65
Max. Velocity	10 m/s
Max. Acceleration	2 m/s^2 (before cable deformation)
Weight	≈ 15 kg
Operating temperature	-20° to +80°C
Storage temperature	-30° to +80°C

Cable forces:

Measurement range in mm	Min. pull-out force	Max. pull-out force
30 000	≈ 15,00 N	≈ 30,00 N

Ordering reference:

CDS1830					OP	

Model

CDS1830

Measurement range

30000 = 0 up to 30 000 mm
(Other ranges available on demand)

Output signal

R01K = 1kΩ output
(Other values on demand)

Linearity

L15 = +/- 0.15% f.s.
L10 = +/- 0.10% f.s. (optional)

Connection

C = Male connector M16 - DIN 3 pin
L4 = Male connector M12 - 4 pin
K = PVC cable - 4 wires + ex: **02** for cable 2 meters long

OP Options

AC = Complete anodizing
BR = Cleaning brush for the cable
BT = Low temperature (down to -30°C)
CP = Fixing of the measuring cable with a clevis
IP67 = Protection class IP67
M6 = Fixing of the measuring cable with a M6 threaded rod
TEV = Water evacuation holes + ex. **180** for 180° holes (see the options page for further details)

Reference example: CDS1830-30000-R01K-L15-K02-OP-AC-M6

Electrical characteristics :

Potentiometric version 1 KΩ : (other values on demand)

Temperature drift …….. +/-50 ppm/°C

Example of wiring diagram with input stage :

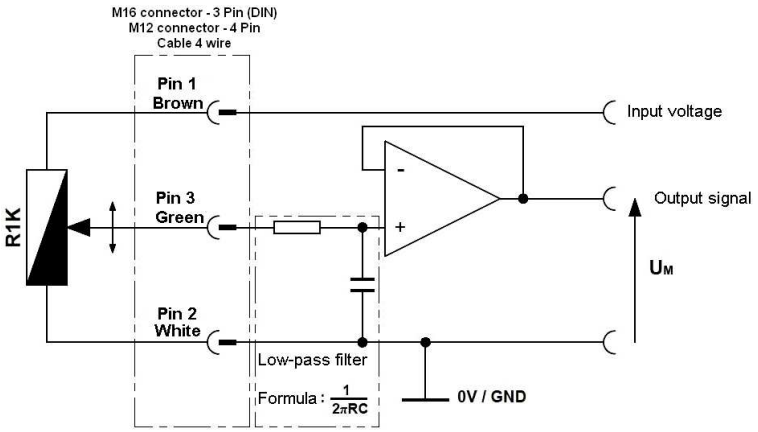

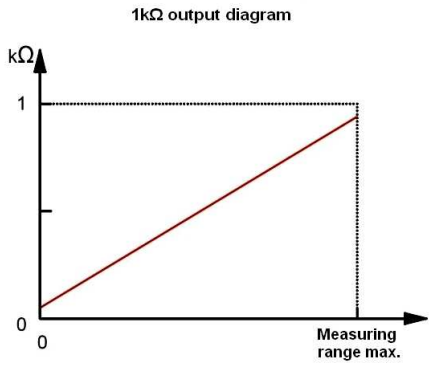

To ensure a good linearity, wire the potentiometer as a voltage divider and never as a rheostat.
The input resistance of the operating system must be very high (greater than 10MΩ)

Connection :

Male connector M16 3 pin (DIN)	Male connector M12 4 pin (DIN)	PVC cable 4 wire	R01K
1	1	Brown	Input voltage +
2	2	White	Input voltage GND
3	3	Green	Signal +
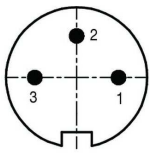 Sensor side view	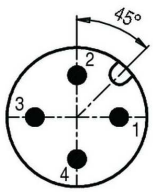 Sensor side view		

Options:

Cable attachment head:

Standard

Measuring cable attachment with a lug.
The attachment mounted on ball bearings allows a free rotation relative to the measurement cable.

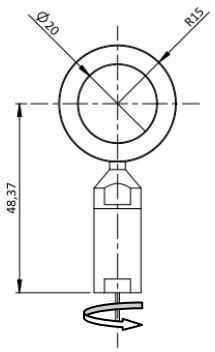

Cable attachment fitted with a M6 threaded rod:

OP-M6

The rod attachment uses a threaded rod with 2 nuts (provided). The required thickness of the plate does not exceed 8mm.
The attachment mounted on ball bearings allows a free rotation relative to the measurement cable.

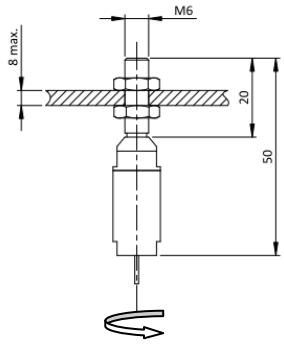

Cable attachment with a clevis :

OP-CP

The attachment of the clevis is done using a pin (provided).
The attachment mounted on ball bearings allows a free rotation relative to the measurement cable.

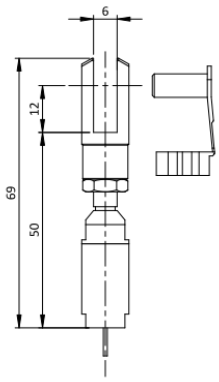

Cleaning brush for the cable:

OP-BR

The cleaning brush wipes the cable in dusty or humid environments.

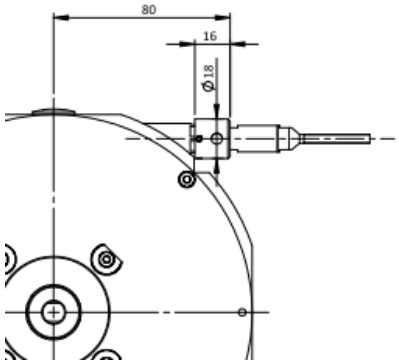

Water evacuation holes:

OP-TEV

The holes allow the natural flow of fluids out of the sensor in order to avoid their accumulation in the system.

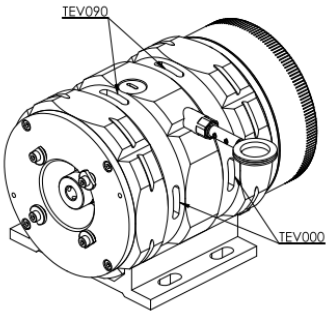

Please specify the implantation angle of the drain holes on the drawing below.
(All value between 0 and 360°)

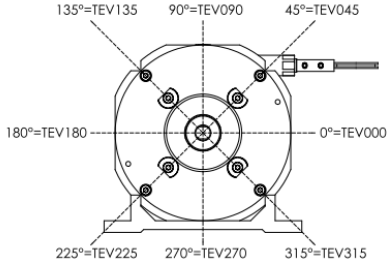

Dimensional Drawing

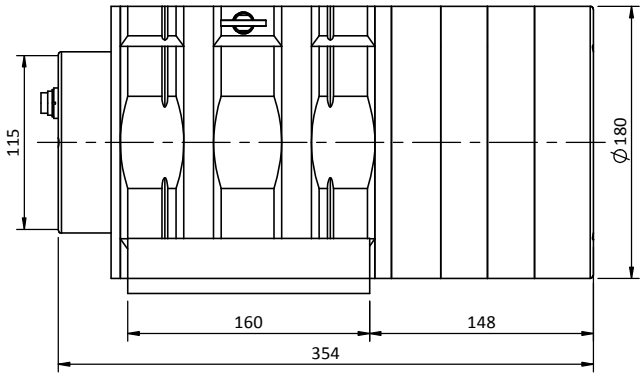

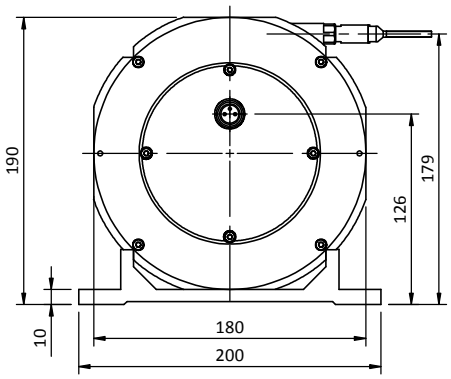

K connection
(PVC cable - 4 wires)

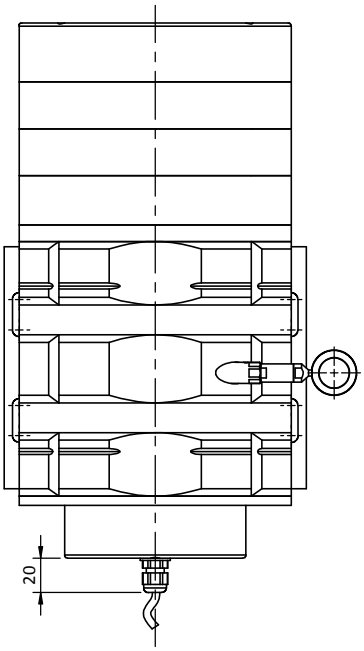

L4 connection
(connector M12 - 4 pin)

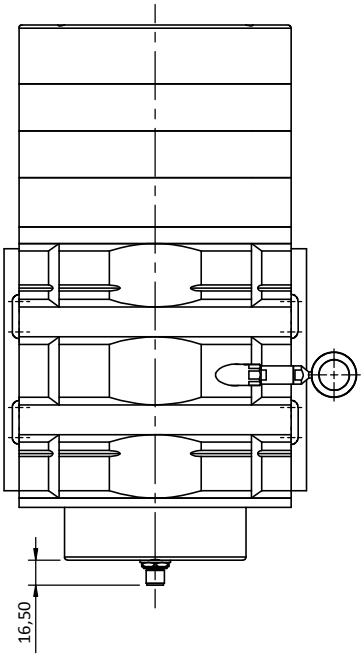

C connection
(Connector M16 - DIN 3 pin)

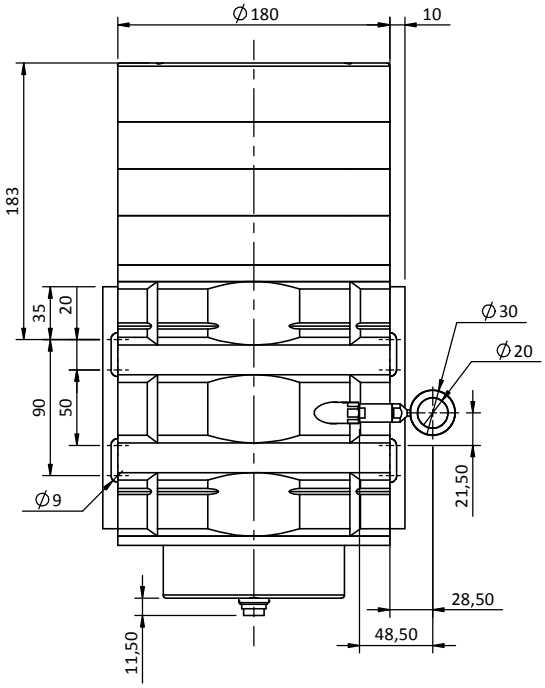

Modular base plate